REV	REVISION RECORD	SIGN	DATA
V1	First edition	ZY	20250228

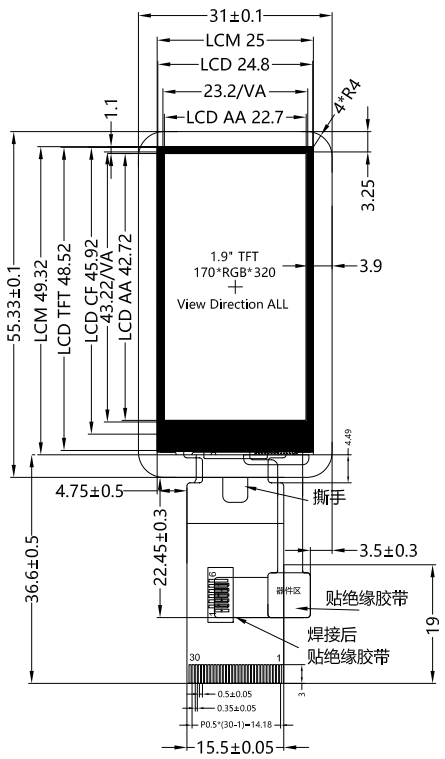

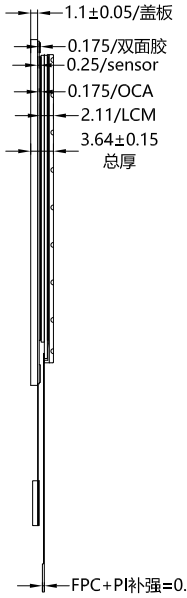

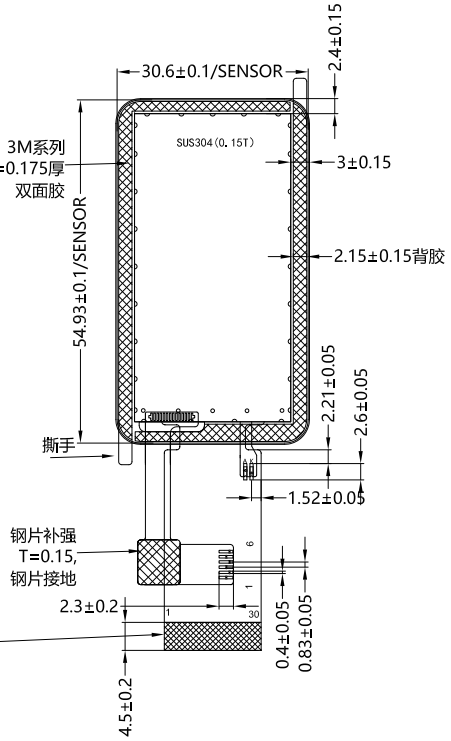

NO.	PIN NAME	NO.	PIN NAME
1	GND	16	DB5
2	VCC	17	DB6
3	IM2	18	DB7
4	IM1	19	SDO
5	RESET	20	LED+
6	CS	21	LED-
7	DC/SCL	22	LED-
8	WR/RS	23	LED-
9	RD	24	LED-
10	SDA	25	TP_VDD
11	DB0	26	TP_SCL
12	DB1	27	TP_SDA
13	DB2	28	TP_INT
14	DB3	29	TP_RST
15	DB4	30	GND

NO.	TP_PIN NAME
1	TP_VDD
2	TP_SCL
3	TP_SDA
4	TP_INT
5	TP_RST
6	GND

IM1	IM2	Interface Mode
0	0	80-8bit
1	1	4-line

NOTES:
1.Display Size (显示尺寸) : 1.9"TFT
2.Viewing Direction (视角方向) : ALL
3.Display Mode (显示模式) : Normally Black
4.Resolution (分辨率) : 170*RGB*320
5.Color (颜色) : 262K
6.Drive IC (驱动IC) : ST7789P3
7.TP Drive IC (触摸驱动IC) : CST816D
8.Interface (接口) : SPI/Parallel
9.Backalight (背光) : White IF=80mA,VF=3.2V(TYP)
10.Luminance (透屏亮度) : 300cd/m²(TYP)
11.Operating temperature (工作温度) : -20℃+70℃
12.Storage temperature (存储温度) : -30℃+80℃
13.RoHS (欧盟标准) : YES
*Unspecified Tolerance (公差) :±0.1

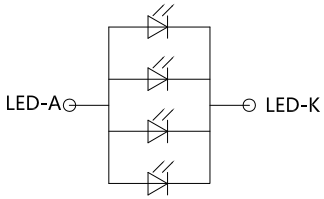

Backalight Circuit Diagram:
(背光电路图)

深圳市金逸晨电子有限公司
ShenZhen GoldenMorning Electronic Co.,Ltd

LCM NO:	T190X7-C30-06-TP			VERSION V1
UNITS:MM	SCALE: FIT	DESIGNED BY:	CHECKED BY:	APPROVED BY:
	SHEET: 1 OF 1	TS	ZY	
	UNIT: MM DATE	2025-02-28	2025-02-28	